Biz Intellia
An end-to-end IoT Solution

CELLULAR

The Leading Enterprise Internet of Things Solution

Intellia Cellular Gateway INT-LoRaCell-01

General Description

Don't have an existing network connection where you need it most? Intellia Cellular Gateways allow your Wireless Sensors to communicate with the Intellia Online Wireless Sensor Monitoring and Notification System via cellular transmission. They are the perfect solution for remote locations, or where an existing internet connection is not an option.

The Intellia Cellular Gateways are based on the latest Dual-band CDMA or 3G wireless protocols and come integrated with wireless access point network (WAN) for use with all Intellia wireless sensors.

The Intellia Cellular Gateway is an advanced all wireless M2M gateway that enables fast time-to-market solutions for a wide range of M2M and partner applications as well. Intellia Cellular Gateway is specifically designed to respond to the increasing market need for global technology that accommodates a variety of vertical M2M application segments and remote wireless sensor management solutions.

Example Applications

- Remote Location Monitoring
- Shipping and Transportation
- Agricultural Monitoring
- Vacant Property Management
- Vacation Home Property Management
- Construction Site Monitoring
- Data Center Monitoring

Intellia Cellular Gateway Features

- Wireless range of 1,200+ feet through 12+ walls *
- Frequency Hopping Spread Spectrum (FHSS)
- Improved interference immunity
- Encrypt-RF® Security (Diffie-Hellman Key Exchange + AES-128 CBC for sensor data messages)
- 50,000 sensor message memory
- Over the air updates (future proof)
- True plug & play, no hassles for internet configuration set-up
- No PC required for operation
- Low-cost cellular service packages
- Local status LEDs with transmission and online status indicators
- AC power supply
- Optional 24 hour battery backup in event of power outage

* Actual range may vary depending on environment.

Wireless Range Comparison

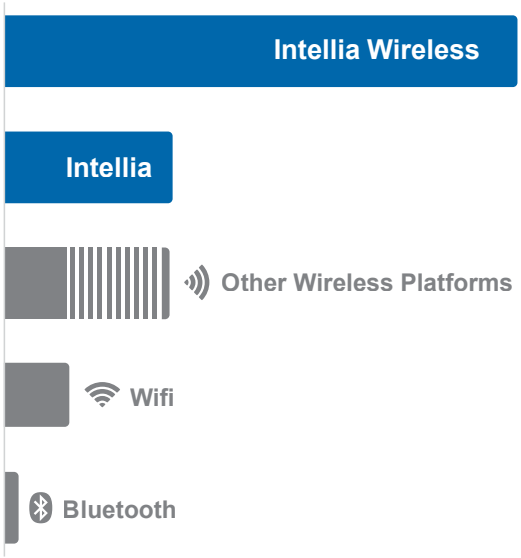

Intellia CDMA Cellular Gateways

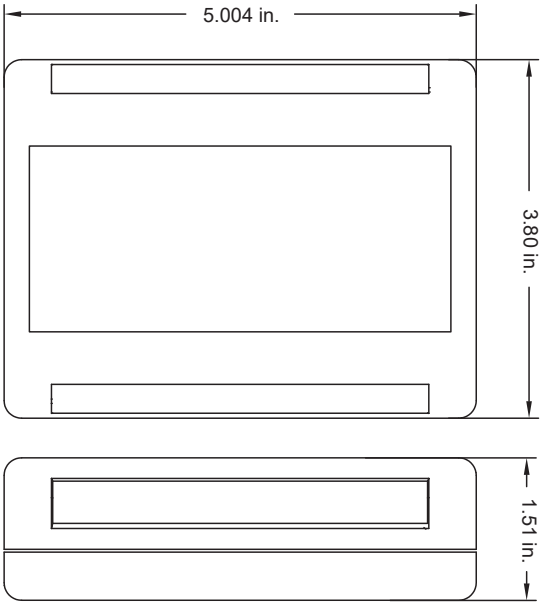

Intellia CDMA Cellular Gateway Specifications		
Carriers Supported	Verizon Wireless, Sprint Wireless, U.S. Cellular	
CDMA	Dual Band CDMA Frequency Range: 800 / 1900 MHz	
Antenna	Articulating Dipole, Connector: SMA, Gain (dBi): 1.5	
Power		
Input Power	5.5 VDC @ 900 mA	
Optional Battery Backup	Battery Type: Rechargeable Lithium Polymer	
	Battery Duration: Up to 24 hours	
	Battery Cycle Life: 500 times	
Mechanical		
LEDs	Cellular Status LED, Online Status LED, Sensor Network Status LED	
Device Memory:	50,000 sensor messages (Sensor messages will be stored in the event of Internet outage and transferred when connection is restored)	
Enclosure	ABS	
Dimensions	5.004 x 3.8 x 1.51 in.	
Weight	7 ounces	
Environmental		
Operating Temperature	-10 to +45°C (14 to 113°F)	
Storage Temperature	-20 to +60°C (-4 to 140°F)	
Wireless		
Wireless Range	1,000+ ft. non-line-of-sight	
Security	Encrypt-RF™ (256-bit key exchange and AES-128 CTR)	
Certifications	FC Industry Canada	
Verizon	FCC: ZTL- G2SC1, FCC: MIVCNN0301	IC: 9794A-G2SC1 and IC: 4160a-CNN0301
Sprint / U.S. Cellular	FCC: ZTL- G2SC1, FCC: RI7CE910-DUAL	IC: 9794A-G2SC1 and IC: 5131A-CE910DUAL

Intellia 3G Cellular Gateways

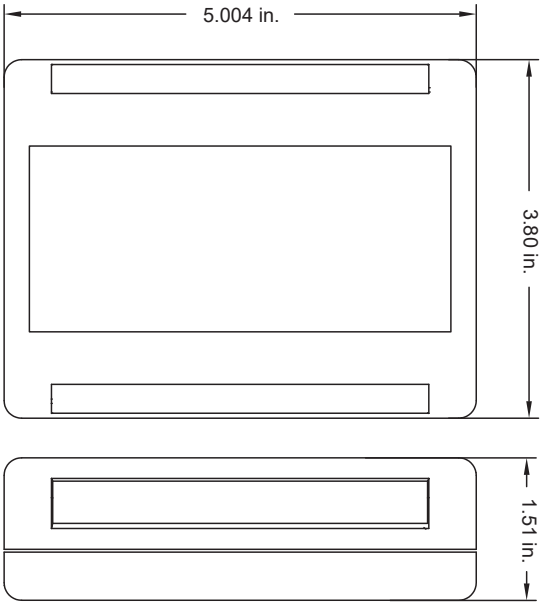

Intellia 3G Cellular Gateway	
Cellular	
Cellular Technology	UMTS Frequency Range: 850 / 1700 / 1900 MHz
Antenna	Connector: RP-SMA Gain (dBi): 1.5
SIM Card Compatibility	Mini-SIM (2FF) 25 mm x 15 mm x 0.76 mm
Power	
Input Power	5.5 VDC @ 2.5 A
Optional Battery Backup	Battery Type: Rechargeable Lithium Polymer
	Battery Duration: Up to 24 hours
	Battery Cycle Life: 500 times
Mechanical	
LEDs	Cellular Status LED, Online Status LED, Sensor Network Status LED
Device Memory:	50,000 sensor messages (Sensor messages will be stored in the event of Internet outage and transferred when connection is restored)
Enclosure	ABS
Dimensions	5.004 x 3.8 x 1.51 in.
Weight	7 ounces
Environmental	
Operating Temperature	-10 to +45°C (14 to 113°F)
Storage Temperature	-20 to +60°C (-4 to 140°F)
Wireless	
Wireless Range	1,000+ ft. non-line-of-sight
Security	Encrypt-RF™ (256-bit key exchange and AES-128 CTR)
Certifications	FC Industry Canada FCC: ZTL- G2SC1, FCC: RI7HE910 IC: 9794A-G2SC1 and IC: 5131A-HE910

Intellia Industrial CDMA Cellular Gateways

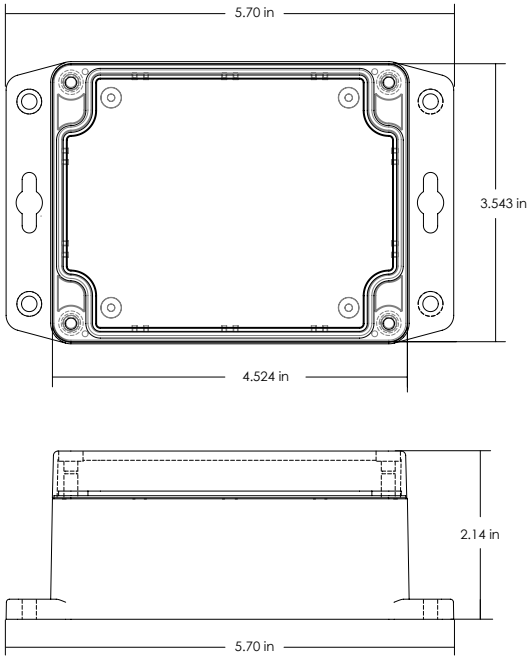

Intellia Industrial CDMA Cellular Gateway Specifications		
Carriers Supported	Verizon Wireless, Sprint Wireless, U.S. Cellular	
CDMA	Dual Band CDMA Frequency Range: 800 / 1900 MHz	
Antenna	Articulating Dipole, Connector: SMA, Gain (dBi): 1.5	
Power		
Input Power	5.5 VDC @ 900 mA (rated for outdoor use)	
Mechanical		
LEDs	Cellular Status LED, Online Status LED, Sensor Network Status LED	
Device Memory:	50,000 sensor messages (messages will be stored in the event of Internet outage and transferred when connection is restored).	
Enclosure	NEMA 1, 2, 4, 4x, 12 and 13 rated, sealed and weather proof NEMA rated enclosures are constructed for both indoor or outdoor use and protect the enclosed circuitry against the ingress of solid foreign objects like dust as well as the damaging effects of water (rain, sleet, snow, splashing water, and hose directed water).	
Dimensions	5.70 x 3.543 x 2.14 in.	
Weight	12 ounces	
Environmental		
Operating Temperature	-10 to +45°C (14 to 113°F)	
Storage Temperature	-20 to +60°C (-4 to 140°F)	
Wireless		
Wireless Range	1,000+ ft. non-line-of-sight	
Security	Encrypt-RF™ (256-bit key exchange and AES-128 CTR)	
Certifications	FC Industry Canada	
Verizon	FCC: ZTL- G2SC1, FCC: MIVCNN0301	IC: 9794A-G2SC1 and IC: 4160a-CNN0301
Sprint / U.S. Cellular	FCC: ZTL- G2SC1, FCC: RI7CE910-DUAL	IC: 9794A-G2SC1 and IC: 5131A-CE910DUAL

Intellia Industrial 3G Cellular Gateways

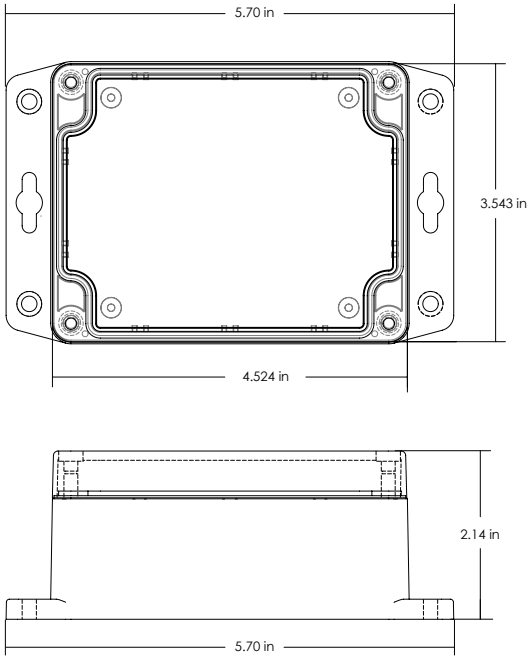

Intellia Industrial 3G Cellular Gateway Specifications	
Cellular Technology	UMTS Frequency Range: 850 / 1700 / 1900 MHz
Antenna	Connector: RP-SMA Gain (dBi): 1.5
SIM Card Compatibility	Mini-SIM (2FF) 25 mm x 15 mm x 0.76 mm
Power	
Input Power	5.5 VDC @ 2.5 A (rated for outdoor use)
Mechanical	
LEDs	Cellular Status LED, Online Status LED, Sensor Network Status LED
Device Memory:	50,000 sensor messages (messages will be stored in the event of Internet outage and transferred when connection is restored).
Enclosure	NEMA 1, 2, 4, 4x, 12 and 13 rated, sealed and weather proof NEMA rated enclosures are constructed for both indoor or outdoor use and protect the enclosed circuitry against the ingress of solid foreign objects like dust as well as the damaging effects of water (rain, sleet, snow, splashing water, and hose directed water).
Dimensions	5.70 x 3.543 x 2.14 in.
Weight	12 ounces
Environmental	
Operating Temperature	-10 to +45°C (14 to 113°F)
Storage Temperature	-20 to +60°C (-4 to 140°F)
Wireless	
Wireless Range	1,000+ ft. non-line-of-sight
Security	Encrypt-RF™ (256-bit key exchange and AES-128 CTR)
Certifications	FC Industry Canada FCC: ZTL- G2SC1, FCC: RI7HE910 IC: 9794A-G2SC1 and IC: 5131A-HE910

Commercial Grade Cellular Gateways:

Intellia commercial grade cellular gateways are designed for applications in ordinary environments (normal room temperature, humidity and atmospheric pressure). Do not use these gateways under the following conditions as these factors can deteriorate the product characteristics and cause failures and burn-out.

- Corrosive gas or deoxidizing gas - chlorine gas, hydrogen sulfide gas, ammonia gas, sulfuric acid gas, nitric oxides gas, etc.).
- Volatile or flammable gas.
- Dusty conditions.
- Under low or high pressure.
- Wet or excessively humid locations.
- Places with salt water, oils chemical liquids or organic solvents.
- Where there are excessively strong vibrations.
- Other places where similar hazardous conditions exist.

Use these product within the specified temperature range. Higher temperature may cause deterioration of the characteristics or the material quality.

Industrial Grade Cellular Gateways - Type 1, 2, 4, 4X, 12 and 13 NEMA Rated Enclosure:

Intellia Industrial cellular gateways are enclosed in reliable, weatherproof NEMA rated enclosures. Our NEMA rated enclosures are constructed for both indoor or outdoor use and protect the sensor circuitry against the ingress of solid foreign objects like dust as well as the damaging effects of water (rain, sleet, snow, splashing water, and hose directed water).

- Safe from falling dirt.
- Protects against wind blown dust.
- Protects against rain, sleet, snow, splashing water, and hose directed water
- Increased level of corrosion resistance
- Will remain undamaged by ice formation on the enclosure